Hermon Laboratories Ltd.
P.O.Box 23
Binyamina 30500, Israel
Tel. +972 4628 8001
Fax.+972 4628 8277
e-mail: *mail@hermonlabs.com*

TEST REPORT

ACCORDING TO:

EN 50131-6:2008

FOR:

Paradox Security Systems

EUT:

PS of Control Panel
Model: EVOHD

This report is in conformity with ISO/ IEC 17025. The "A2LA Accredited" symbol endorsement applies only to the tests and calibrations that are listed in the scope of Hermon Laboratories accreditation. The test results relate only to the items tested. This test report shall not be reproduced in any form except in full with the written approval of Hermon Laboratories Ltd.

Table of contents

1 Applicant information 3
2 Equipment under test attributes 3
3 Manufacturer information 3
4 Test details 3
5 Tests summary 4
6 EUT description 6
6.1 General information 6
6.2 Product label 6
6.3 Batteries used 7
6.4 Product photos 8
6.5 Tampers implementation 10
6.5.1 Detection of access to the inside of the PS and Removal from mounting 10
7 Test Setups 11
8 Functional Requirements 14
9 Marking 22
10 Documentation 22
11 Tests 24
12 Tables of Test Results 53
13 APPENDIX A Test equipment and ancillaries used for tests 63
14 APPENDIX B Test laboratory description 63
15 APPENDIX C Abbreviations and acronyms 64
16 APPENDIX D Specification references 64

1 Applicant information

Client name:	Paradox Security Systems
Address:	6 Milton Street, Freeport, Grand Bahama, Bahamas
Telephone:	242-352-7766
Fax:	242-352-7771
E-mail:	nimrodh@paradox.com
Contact name:	Mr. Nimrod Herman

2 Equipment under test attributes

Model	HW	SW
EVOHD	668-5005-996	V1.10
AUX equipment:		
K641+	641-5005-130	V1.00

Receipt date: February 28, 2014

3 Manufacturer information

Manufacturer name:	Paradox Security Systems
Address:	780 Industrial Boulevard St-Eustache, Quebec J7R 5V3 Canada
Telephone:	450- 491-7444
Fax:	450-491-1095
E-mail:	sgravel@paradox.com
Contact name:	Ms. Sophie Gravel

4 Test details

Project ID:	25445
Location:	HL
Test completed:	21 May 2014
Test specifications:	EN 50131-6:2008, EN 50131-1:2006+A1:2009

5 Tests summary

The EUT was subjected to tests according to EN 50131-6:2008, in conjunction with EN 50131-1:2006+A1:2009 standards, for Security Grade 3, Environmental Class II, Type A power supply as listed in the table below and found to be in compliance with the standards requirements.

Test	
EN 50131-6	**Control Panel**
	Type A
Section 7.2, Reduced functional test	Pass
Section 7.3, PS rating	Pass
Section 7.4, Output voltage stability – gradual load variation	Not required
Section 7.5, Output voltage stability – switched load variation	Not required
Section 7.6, Loss of EPS	Pass
Section 7.7, Signaling: Storage device – low voltage	Pass
Section 7.8, Signaling: Storage device – failure	Pass
Section 7.9, Signaling: Low output voltage	Pass
Section 7.10, Signaling: Power unit failure	Pass
Section 7.11, Signaling: Power unit failure – SD charging	Pass
Section 7.12, Remote test	Not required**
Section 7.13, SD recharging	Pass
Section 7.14, Over-voltage protection	Not required
Section 7.15, Short circuit protection	Not required
Section 7.16, Overload protection	Not required
Section 7.17, Deep discharge protection	Pass
Section 7.18, Automatic changeover to APS	Pass
Section 7.19 Tamper Protection	Pass
Section 7.20 Tamper Detection – Access to inside of housing	Pass
Section 7.21 Tamper Detection – Removal from mounting	Pass
Section 7.22 Tamper Detection – Penetration of the housing	Not required**
Section 7.23 Environmental and EMC	Pass
Section 7.24 Marking and Documentation	Pass

** The test is not mandatory for grade 3 equipment.

Revision History Table:					
Date	Report No.	Prepared	Reviewed	Approved	Amendment Description
May 21, 2014	PARIAS_EN50131-6.25445	Mr. Mihaeli Feldmann, Project Manager	Mr. Michael Brun, Safety Group Manager	Mr. Michael Brun, Safety Group Manager	Original Report

6 EUT description

6.1 General information

The EUT I a PS Type A of CIE Alarm System Classified Security Grade 3, Environmental Class II, fixed equipment, type A power supply

EVOHD is a security and access control system with 8 on-board zone inputs (16 with zone doubling) that is expandable to 48 or 192 zones via the 4-wire hybrid bus. The EVO control panel features up to 999 users, 8 partitions, 32 doors and can support up to 254 modules in any combination.

EVO also supports 32 virtual zones in addition to its security zones and access control doors. Virtual zones can be used to automate PGM activations without occupying a security zone and without affecting the system's security functions. The EVO system is a logical solution to every
installer's security, access control and home automation installation needs.

Electrical Specifications:

-AC Power: 16Vac, 40VA, 60Hz
-Backup Battery: 12Vdc, 7Ah minimum
-Auxiliary Power: 0.8A typical, 2.0A maximum, fuseless shutdown at 2.5ABell Output: 11.4 to 12.5Vdc, 1A maximum, fuseless shutdown @ 3A
-PGM Output: PGM1 to PGM4 100mA solid-state relays with +/-trigger, PGM5 Form C relay output rated at 5A/ 28Vdc N.O. / N.C..
-Transformer with a minimum 40VA rating

The main board, transformer and PS are housed in a tamper protected metal box as presented in Appendix C Photographs.

6.2 Product label

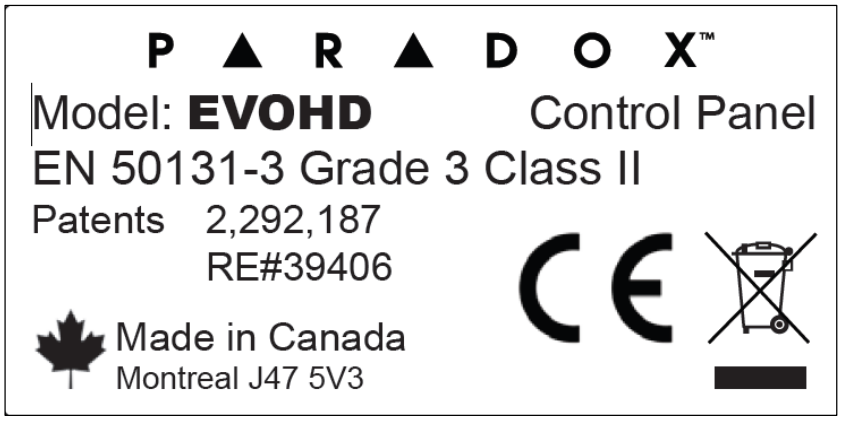

6.3 Batteries used

6.4 Product photos

6.4.1 General View

6.4.2 Internal View

6.4.3 Main PCB

CELLULAR
RESET
EVO HD
V1.10 (B)
04/14 ET-901
SN:07000B3F
EVO HD
V1.10 (B)
04/14 ET-901
SN:07000B3F
BATT
STATUS
AUX
RELAY
RS-485
AUX 12V
HYB BUS

6.5 Tampers implementation

6.5.1 Detection of access to the inside of the PS and Removal from mounting

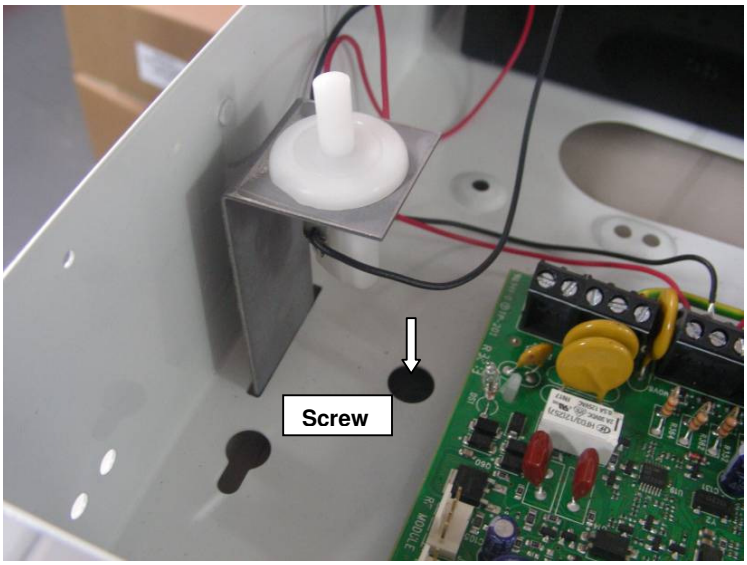

7 Test Setups

Figure 6.5.1 Setup for PS rating test

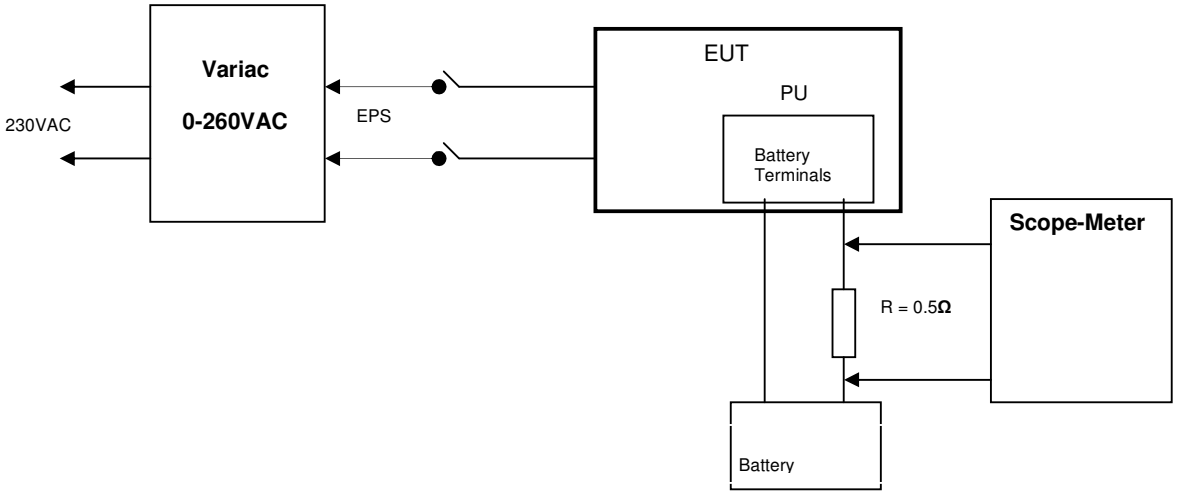

Figure 6.5.2 Setup for storage device - low voltage test

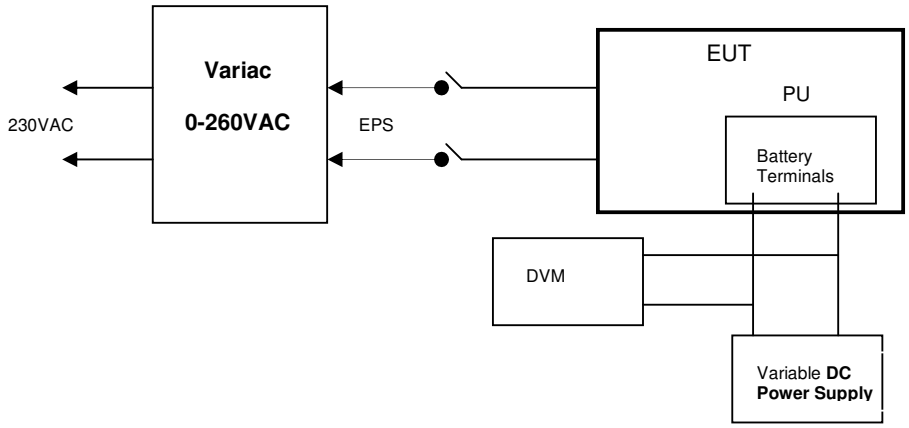

EN 50131-6			
Clause	Requirement – Test	Result - Remark	Verdict

Figure 6.5.3 Setup for SD recharging

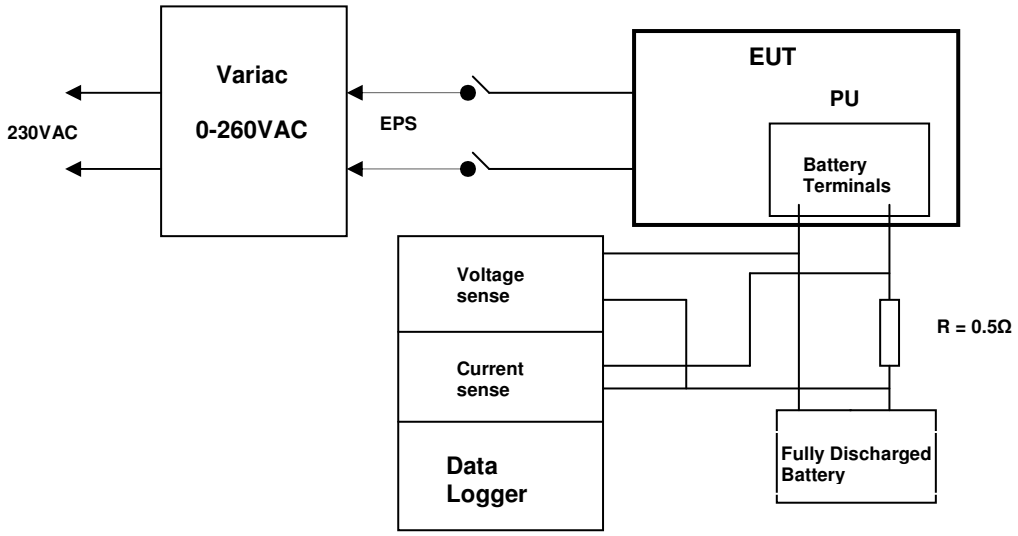

EN 50131-6			
Clause	Requirement – Test	Result - Remark	Verdict

8 Functional Requirements

4.1	**General**		
	The PS shall supply power to the components of the I&HAS continuously.		P
	There are three types of PS, which are independent of security grade. These types are illustrated in Figure 1.	Type A	P
	The PS types are defined in EN 50131-1. Storage devices required to meet the I&HAS standby requirements as specified in EN 50131-1 may be distributed in more than one PS.		N/A
	Depending upon the security grade and PS type, the PS shall have the functionality as defined in Table 1. If a function is provided that is optional for a particular grade and a claim of compliance is made, it shall meet the applicable requirements for the grade for which compliance is claimed.	Meet the applicable requirements of PS of Security grade 3, PS type A	P
4.2	Monitoring of PS		
	The PS shall generate fault signals or messages for communication to the CIE according to Table 2.	Comply	P
	Monitoring signals or messages shall be fail-safe such that total loss of function of the PS will be recognized as a fault condition by the I&HAS.	Comply	P
4.2.1	Loss of EPS		
	A loss of EPS condition shall be detected within 1 s.	Comply	P
	When the EPS has been continuously disconnected for a minimum of 1 s and a maximum of 60 s, an EPS fault signal or message shall be generated.	Comply	P
	After a loss of EPS, when the EPS is restored the re-connection condition shall be detected within 1 s.	Comply	P
	When the EPS has been continuously re-connected for a minimum of 1 s and a maximum of 60 s an EPS fault signal or message shall be removed.	Comply	P
4.2.2	Storage Device – Low Voltage		
	The voltage of the storage device shall be monitored to detect an SD low voltage condition.	See also clause 7.7	P
	For PS types A and B:		

EN 50131-6			
Clause	Requirement – Test	Result - Remark	Verdict
	An APS Fault signal or message shall be generated according to Table 2 and within the maximum time periods defined in Table 3, when the voltage of the SD falls below a value as specified by the PS manufacturer.	Comply	P
	An APS Fault signal or message shall be removed according to Table 2 and within the maximum time periods defined in Table 3, when the voltage of the SD rises above a value specified by the PS manufacturer.	Comply	P
	For PS type C:		
	A storage device low voltage fault signal or message shall be generated within the maximum time periods defined in Table 3, before the SD reaches a condition such that it is unable to provide its rated output for longer than a minimum of 30 days.	Type A	N/A
	A storage device low voltage fault signal or message shall be removed within 10 s according to Table 2, when the voltage of the SD rises above the low value specified by the PS manufacturer e.g. following replacement of the battery.	Type A	N/A
	For all PS types, the PS manufacturer shall declare in his documentation the voltage of the SD that will generate this fault signal or message.	Manufacturer declare 10.5V as low battery	P
4.2.3	Storage Device – Failure		
	For PS type A, a SD failure condition shall be detected within 24 h of failure of the SD.	Comply	P
	An APS Fault signal or message shall be generated within 10 s of detection of SD failure.	“System/Panel; Battery Failure” message is generated.	P
	Examples of methods deemed suitable to determine a storage device failure condition are given in Annex A.		--
	The APS Fault signal or message shall be removed within 10 s of detection of a normal storage device condition.	Comply	P
	If the PS is designed to be connected to two or more storage devices in a parallel configuration in accordance with the guidance of the SD manufacturer, they shall be monitored as separate storage devices. An APS Fault signal or message shall be generated upon detection of failure for any one device. The APS fault signal or message shall be removed only when all devices no longer show a failure condition.		N/A

EN 50131-6			
Clause	Requirement – Test	Result - Remark	Verdict
	These tests shall only be applied when the EPS is available.		--
	Following disconnection and reconnection of the EPS, this test may be delayed for up to 24 h to enable recharge of the SD.	Delay not implemented	N/A
4.2.4	Low Output Voltage		
	For PS types A and B, Grades 3 and 4, a Power Output Fault signal or message shall be generated within 10 s of a low output voltage occurring on one or more independent power outputs e.g. due to failure in the power supply or intervention of an output protection device.	Comply	P
	The Power Output Fault signal or message shall be removed within 10 s of the voltage on all independent power outputs rising above the minimum power output voltage.	Comply	P
4.2.5	Power Unit Failure		
	When the EPS is present, for PS types A and B, Grades 3 and 4, the PU shall be monitored to detect if it can no longer provide the rated voltage to the independent power outputs from the EPS.	Comply	P
	When the EPS is present, for PS type A, Grades 3 and 4, the PU shall be monitored to detect if it can no longer recharge the SD.	Comply	P
	A Power Output Fault signal or message shall be generated within 10 s of either of these conditions occurring.	“System/Panel; AC Failure” message is generated	P
	The Power Output Fault signal or message shall be removed within 10 s of the restoration of the normal operation of the PU.	Comply	P
4.2.6	Remote Test		
	PS type A at Grade 4 shall have means to receive a signal or message to trigger the PS internal tests of Storage Device Failure.	Remote test is not mandatory for Grade 3	N/A
	The resulting test sequence shall not prevent the PS from operating in accordance with Tables 1 and 2.	See above	N/A
	The PS shall acknowledge receipt of the remote test request within 10 s of receipt of the remote test request. If no dedicated acknowledge facility is available, the APS Fault signal or message shall be used to communicate the remote test request acknowledgement.	See above	N/A
	When the test is initiated, the PS shall not remain in test mode for a period in excess of 60 s.	See above	N/A

EN 50131-6			
Clause	Requirement – Test	Result - Remark	Verdict
	If the result of the test is a pass, the APS Fault signal or message shall be removed within 60 s of receipt of the remote test request.	See above	N/A
	If the result of the test is a fail, the APS Fault signal or message shall remain present.	See above	N/A
4.3	APS Capability		
	A PS types A and B shall be capable of continuously supplying its rated output to the I&HAS in the event of interruption of the EPS.	Comply	P
	The PS manufacturer shall specify the minimum and maximum storage device capacity that can be used with the PS	Comply	P
	The PS manufacturer shall provide sufficient information to enable calculation of the minimum time period that the PS can continuously supply its rated output when fitted with a range of storage devices.	Comply	P
4.4	Recharging for PS type A		
	When fitted with a storage device of capacity as defined by the PS manufacturer, the power supply shall be capable of recharging the storage device to 80 % of this storage device capacity following discharge to the minimum level in accordance with 7.1.5.	See table 7.13	P
	The storage device shall be automatically recharged from the EPS within the maximum recharge periods as specified in EN 50131-1	Comply	P
	The PS shall be capable of supplying its rated output continuously during recharge of the storage device.	Comply	P
	The charging characteristics used by the PS to recharge the SD shall remain within the limits recommended by the SD manufacturer.	Comply	P
	A Grade 4 PS shall ensure that during float charging, the charging characteristics are within the SD manufacturer's specifications for the range of SD temperatures reached for the environmental class.	Grade 3	N/A
4.5	Over-voltage Protection		
	To prevent damage being caused to other I&HAS components due to failure of any single PS component, PS Grades 3 and 4 shall include protection to ensure that the voltage at any independent power output does not exceed 125 % of the maximum power output voltage.	Overvoltage protection at 15.5 V	P

EN 50131-6			
Clause	Requirement – Test	Result - Remark	Verdict
4.6	Short Circuit Protection		
	Each independent power output shall be protected against short circuit in the connected load.	No multiple independent power outputs	N/A
	Following removal of the short circuit and reset of any protection device, all independent power outputs shall continue to operate normally.		N/A
	A short circuit in the load connected to any independent power output shall not reduce the functionality of any other independent output.		N/A
	Any transients that are generated during operation of the protection shall meet the requirements of 4.15.7.		N/A
4.7	Overload Protection		
	Each independent power output shall be protected against overload condition in the connected load.	No multiple independent power outputs	N/A
	Following removal of the overload and reset of any protection device, all independent power outputs shall continue to operate normally.		N/A
	An overload condition on any independent power output shall not reduce the functionality of any other independent output.		N/A
	Any transients that are generated during operation of the protection shall meet the requirements of 4.15.7.		N/A
4.8	Deep Discharge Protection		
	When deep discharge of a storage device may cause damage to the storage device, protection shall be provided in PS for Grades 3 and 4. The PS manufacturer shall declare the voltage of the SD below which this protection shall operate and this shall be less than the minimum power output voltage.	10.5 V	P

EN 50131-6			
Clause	Requirement – Test	Result - Remark	Verdict
4.9	Automatic changeover to APS		
	Any transients that are generated during the changeover period between EPS and APS operation shall meet the requirements of 4.15.7.	Comply See also clause 7.18	P
4.10	Ripple		
	For PS with dc outputs, the peak to peak ripple content of the voltage at any independent power output shall be as specified by the PS manufacturer and shall not exceed 5 % of the maximum power output voltage.	Comply	P
4.11	Tamper Security		
	Where the PS is housed with one or more components of an I&HAS, the tamper security requirement of the PS shall be that of those components.	PS is enclosed in EN50131-3 evaluated and found compliant enclosure	P
	Where the PS is housed in a separate enclosure, the enclosure shall meet the tamper security requirements of this section.	Comply	N/A
4.11.1	Tamper Protection		
	The construction of the power supply enclosure shall meet the tamper protection requirements of EN 50131-1.	Comply	P
	Provision shall be made to allow adequate fixing of the enclosure to the mounting surface.	Comply	P
4.11.2	Tamper Detection		
	A tamper signal or message shall be generated according to the requirements as specified in Table 4 and before access can be gained to override the detection.	Comply	P
4.11.2.1	Access to the inside of the housing		
	All components, means of adjustment and mounting screws, which, when interfered with, could adversely affect the operation of the PS, shall be located within the PS housing. Such access shall require the use of an appropriate tool and depending on the grade as specified in Table 4 shall generate a tamper signal or message before access can be gained.	Comply	P
	It shall not be possible to gain such access without generating a tamper signal or message or causing visible damage.	Comply	P

EN 50131-6			
Clause	Requirement – Test	Result - Remark	Verdict
4.11.2.2	Removal from mounting		
	Attempts to remove the power supply from its mounting surface for a distance greater than that defined in Table 5 shall generate a tamper signal or message according to Table 4.	Comply	P
	It should not be possible to defeat the removal from mounting detection by sliding a 1 mm thick blade between the mounting surface and the power supply.	Comply	P
4.11.2.3	Penetration of the housing		
	When mounted according to the PS manufacturer's instructions, it shall not be possible to penetrate the housing of the PS through any of its accessible faces with a metal tool creating a hole of 4 mm or greater without generating a tamper signal or message according to Table 4.	This requirement is not mandatory for Grade 3	N/A
4.12	Environmental		
	Environmental requirements are covered by a separate test report	Comply	P
4.13	Safety		
	Safety requirements are covered by a separate test report	Comply	P
4.14	EMC		
	EMC requirements are covered by a separate test report	Comply	P
4.15	Electrical		
4.15.1	Connections		P
	The means of electrical connection shall be appropriate for the physical size and current carrying capacity of the required conductors.	Comply	P
	Terminal blocks and other components utilised for connections shall be identifiable with numbers or other marks specified in the documentation.	Comply	P

EN 50131-6			
Clause	Requirement – Test	Result - Remark	Verdict
4.15.2	Rated Output		
	Under normal operating conditions and when fitted with a SD of maximum capacity as defined by the PS manufacturer, the power supply shall deliver its rated output voltage / current continuously, limited during APS operation to the time periods specified in EN 50131-1, via its independent power outputs into any load except as may be otherwise specified by the PS manufacturer.	Comply	P
	The power requirement of any integrated component e.g. CIE, or PS control components shall be declared in the PS manufacturer's documentation.	Comply	P
4.15.3	Output Voltage Range		
	Under normal operating conditions, the voltage at the independent power outputs shall lie between the minimum power output voltage and the maximum power output voltage with a load connected and drawing no greater than the rated output of the power supply.	All control panel outputs are rated to operate between 10.8Vdc and 12.1Vdc	P
4.15.4	Input Voltage Range		
	For power supplies types A and B, the requirements of 4.15.3 shall be met when any applied and available EPS lies within the range of 230 V AC +10 %, -15 % at a frequency as specified by the PS manufacturer.	Comply	P
4.15.5	Output Voltage Stability – Gradual Load Variation		
	A gradual and continuous load variation on any one independent power output shall not reduce the functionality of this or any other independent power output.	No multiple independent power outputs	N/A
4.15.6	Output Voltage Stability – Switched Load Variation		
	A switched load variation on any independent power output shall not reduce the functionality of any independent power output.	No multiple independent power outputs	N/A
	Any transients that are generated during the load variation shall meet the requirements of 4.15.7.		N/A

EN 50131-6			
Clause	Requirement – Test	Result - Remark	Verdict
4.15.7	Transients on the power outputs		
	Transients on any independent Power Output during operation of the PS shall be limited to:	See clause 7.18	--
	a) no more than 125 % of the maximum power output voltage and no less than 95 % of the minimum power output voltage for a period not exceeding 200 ms, and	Comply	P
	b) no more than 140 % of the maximum power output voltage and no less than 75 % of the minimum power output voltage for a period not exceeding 1 ms.	Comply	P

9 Marking

	The power supply shall be marked in accordance with 4.15.1, EN 50131-1, and either EN 60950 series or EN 60065.	Comply	P

10 Documentation

	The power supply shall be accompanied by documentation in accordance with EN 50131-1.	Comply	P
	Additionally, the documentation shall contain the following information:		
	a) installation, commissioning, maintenance and operating instructions;	Provided in documentation	P
	b) brief description of operation including characteristics of monitoring functions provided;	Provided in documentation	P
	c) type of PS (A, B or C);	Type A Provided in documentation	P
	d) for types A and B, voltage rating and frequency requirements of the EPS;	Provided in documentation	P
	e) rated output of the power supply and maximum rated output of each independent power output;	Provided in documentation	P
	f) the power requirement for any integrated component e.g. CIE, or the PS control circuitry;	Provided in documentation	P

EN 50131-6			
Clause	Requirement – Test	Result - Remark	Verdict
	g) output voltage range under normal operating conditions;	Provided in documentation	P
	h) for PS with dc outputs, the maximum output peak to peak ripple voltage;	Provided in documentation	P
	i) type of SD, its maximum capacity and maximum time to recharge to 80 %;	Provided in documentation	P
	j) the SD voltage below which the APS Fault: Low Voltage SD signal or message will be generated;	11.3 V	P
	k) the voltage at any independent power output below which the Power Output Fault signal or message will be generated;	Provided in documentation	P
	l) the SD voltage below which the Deep Discharge Protection function will operate;	Provided in documentation	P
	m) over-voltage protection trigger voltage;	Provided in documentation	P
	n) connection details, including sufficient detail to enable effective interface and operation as part of the I&HAS;	Provided in documentation	P
	o) electrical and logical characteristics of monitoring signals and messages e.g. volt-free contact, message protocols supported;	Provided in documentation	P
	p) operating temperature and humidity range;	Provided in documentation	P
	q) weights and dimensions;	Provided in documentation	P
	r) fixing details;	Provided in documentation	P
	s) details of type and value for any user serviceable components e.g. fuses;	Provided in documentation	P
	t) details (e.g. frequency and procedure) of any required calibration checks and adjustments.	No calibration or check required	N/A

EN 50131-6			
Clause	Requirement – Test	Result - Remark	Verdict

11 Tests

	Where products are to be tested for compliance with this standard, the following tests shall be applied to PS types A, B and C according to Table 7 below for the appropriate grade as defined in Table 1. These tests are intended to be primarily concerned with verifying the correct operation of the power supply to the requirements of this standard and the specification provided by the manufacturer. All the test parameters specified shall carry a general tolerance of ± 10 % unless otherwise stated.		P
7.1	**General test conditions**		
7.1.1	Standard laboratory conditions for testing		
	The general atmospheric conditions in the measurement and tests laboratory shall be those specified in EN 60068-1, 5.3.1, unless stated otherwise. Temperature: 15 °C to 35 °C Relative humidity: 25 % RH to 75 % RH Air pressure: 86 kPa to 106 kPa		P
7.1.2	General detection testing environment and procedures		
	The PS manufacturer's documented instructions regarding mounting and operation shall be applied to all tests.		P
7.1.3	Signal or message processing time		
	Where the PS is integrated with another I&HAS component (e.g. CIE) or another component is the only means to indicate the generation of a signal or message, allowance shall be made for the processing time of that component.		P
7.1.4	Load electrical characteristics		
	The electrical characteristics of the load used in these tests shall have no reactive component.	Programmable electronic load used (no reactive component)	P
7.1.5	SD Discharged Condition		
	A SD shall be considered to have reached its fully discharged condition if it has been subject to discharge from a fully charged state using a fixed current load over a period defined according to the SD manufacturer.	Implemented	P

EN 50131-6			
Clause	Requirement – Test	Result - Remark	Verdict

7.2	**Reduced Functional Test**		
7.2.1	Principle		
	The principle of the reduced functional test consists of operating the PS under full load conditions to verify that the PS is operational before undergoing other tests (e.g. impact test, environmental test) and that it continues to function after these tests.	(See appended table 7.2)	--
	For type A PS the test is carried out with a fully discharged SD and maximum EPS voltage.	Implemented	P
	For a type B PS the test is carried out with a SD at any state of charge and maximum EPS voltage.	Type A power supply	N/A
	For a type C PS the test is carried out with a SD of sufficient charge for its voltage at any independent power output to remain above the Storage Device - Low Voltage value.	Type A power supply	N/A
7.2.2	Test Conditions		
	Connect a SD of the maximum capacity specified for the PS. For PS type A this SD shall be discharged to the minimum level in accordance with 7.1.5.	Implemented	P
	Connect a load to the PS that will demand the full rated output of the PS proportionately spread across all the independent power outputs according to the individual maximum rating of each independent power output.	Implemented	P
7.2.3	Mounting		
	Mount the PS according to the PS manufacturer's instructions.	Implemented	P
7.2.4	Procedure		
7.2.4.1	Stimuli		
	For PS types A and B apply an EPS voltage of 230 VAC +10 % to the PS at a frequency specified by the PS manufacturer.	Implemented	P
	Operate the PS.		--
	Open the PS housing by normal means.		--
7.2.4.2	Measurement		
	Measure the voltage and ripple voltage at each independent power output.	Implemented	P
	Monitor the EPS, APS, Power Output Fault and Tamper signal or message outputs.	Implemented	P

EN 50131-6			
Clause	Requirement – Test	Result - Remark	Verdict
7.2.5	Pass/Fail Criteria		
	Throughout the test, the voltage and ripple voltage at any independent power output shall remain within the limits specified by the manufacturer.	Comply	P
	There shall be no EPS, APS or Power Output Fault signals or messages generated during the tests.	Comply	P
	A Tamper signal or message shall be generated when the PS housing is opened by normal means.	Comply	P
7.3	**PS Rating**		
7.3.1	Principle		
	The principle of this test is to verify the continuous rated output of the PS under full load conditions and for PS types A and B, under maximum and minimum values of EPS voltage. This test is also to verify the specified power requirements of any integrated component or the PS control circuitry.	(See appended table 7.3)	P
7.3.2	Test Conditions		
	Connect a SD of the maximum capacity specified for the PS. For PS type A this SD shall be discharged to the minimum level in accordance with 7.1.5.	Implemented	P
	Connect a load to the PS that will demand the full rated output of the PS proportionately spread across all the independent power outputs according to the individual maximum rating of each independent power output.	Implemented	P
7.3.3	Mounting		
	Mount the PS according to the PS manufacturer's instructions.	Implemented	P
7.3.4	Procedure		
7.3.4.1	Stimuli		
	For PS types A and B:		--
	Apply an EPS voltage of 230 V AC -15 % to the PS at the frequency specified by the PS manufacturer and operate the PS for 30 min.	195Vac, 50Hz	P
	Apply an EPS voltage of 230 V AC +10 % to the PS and operate the PS for 24 h.	253Vac, 50Hz	P
	For PS type C, operate the PS for 24 h.	Type A	N/A

EN 50131-6			
Clause	Requirement – Test	Result - Remark	Verdict
	At the end of the test period, disconnect the load and for PS types A and B, disconnect the EPS.	Implemented	P
7.3.4.2	Measurement		
	Measure the voltage and ripple voltage during the test at each independent power output.	Implemented	P
	Measure the quiescent current drawn from the SD by the PS control circuitry and any other components within the PS housing e.g. CIE.	Implemented with PS control circuitry	P
7.3.5	Pass/Fail Criteria		
	Throughout the test, the voltage and ripple voltage at any independent power output shall remain within the limits specified by the manufacturer.	Comply (See appended table 7.3)	P
	The quiescent current consumption of the PS control circuitry or any integrated components shall be no more than that specified by the manufacturer.	Comply (See appended table 7.3)	P
7.4	**Output Voltage Stability - Gradual Load Variation**		
7.4.1	Principle		
	The principle of this test consists of applying a continually varying load to one independent power output of the PS and verifying that there is no influence on any other independent power output.	No multiple independent power outputs	N/A
7.4.2	Test Conditions		
	Connect a variable load to one of the independent power outputs, capable of continuous adjustment to demand from 10 % to 100 % of the rating of that independent power output.		N/A
	Connect a fixed load proportionately spread across all the other independent power outputs, according to their individual maximum rating. This fixed load will demand the full rated output of the PS when the tested output is at 100 % loading.		N/A

EN 50131-6			
Clause	Requirement – Test	Result - Remark	Verdict
7.4.3	Mounting		
	Mount the PS according to the PS manufacturer's instructions.		N/A
7.4.4	Procedure		
7.4.4.1	Stimuli		
	For PS types A and B, apply an EPS voltage of 230 V AC at the frequency specified by the PS manufacturer.		N/A
	Operate the PS.		
	Continuously increase the demanded load at a constant rate from 10 % to 100 % over a period of 10 s.		N/A
	Continuously decrease the demanded load at a constant rate from 100 % to 10 % over a period of 10 s.		N/A
7.4.4.2	Measurement		
	Measure the voltage and ripple voltage during the test at each independent power output.		N/A
7.4.4.3	Repeat		
	For PS having two or more independent power outputs, repeat this test with the variable load connected to one of the other independent power outputs.		N/A
7.4.5	Pass/Fail Criteria		
	Throughout the test, the voltage and ripple voltage at each independent power output shall remain within the limits specified by the PS manufacturer.		N/A

EN 50131-6			
Clause	Requirement – Test	Result - Remark	Verdict

7.5	**Output Voltage Stability – Switched Load Variation**		
7.5.1	Principle		
	The principle of this test consists of applying a switched load to one independent power output of the PS and verifying that there is no influence on any other independent power output.	No multiple independent power outputs	N/A
7.5.2	Test Conditions		
	Connect a load to one of the independent power outputs, capable of switching between 50 % to 100 % demand of the rating of that independent power output within 5 ms.		N/A
	Connect a fixed load proportionately spread across all the other independent power outputs, according to their individual maximum rating. This fixed load will demand the full rated output of the PS when the tested output is at 100 % loading.		N/A
7.5.3	Mounting		
	Mount the PS according to the PS manufacturer's instructions.		N/A
7.5.4	Procedure		
7.5.4.1	Stimuli		
	For PS types A and B, apply an EPS voltage of 230 V AC at the frequency specified by the PS manufacturer.		N/A
	Operate the PS.		N/A
	Switch the load demand from 50 % to 100 %.		N/A
	Switch the load demand from 100 % to 50 %.		N/A
7.5.4.2	Measurement		
	Measure the voltage and ripple voltage during the test at each independent power output. Monitor the voltage at each independent power output for transients.		N/A
7.5.4.3	Repeat		
	For PS having two or more independent power outputs, repeat this test with the switched load connected to one of the other independent power outputs.		N/A
7.5.5	Pass/Fail Criteria		
	Throughout the test, the voltage and ripple voltage at each independent power output shall remain within the limits specified by the		N/A
	Any transient voltages detected at the independent power outputs shall meet the requirements of 4.15.7.		N/A

EN 50131-6			
Clause	Requirement – Test	Result - Remark	Verdict

7.6	**Signalling: Loss of EPS**		
7.6.1	Principle		
	The principle of this test consists of verifying that an EPS Fault signal or message is generated within the specified time period when the EPS is removed and cancelled within the specified time period when the EPS is re-connected.	See table 7.6	P
7.6.2	Test Conditions		
	Connect a load demanding at least 10 % of the rated output of the PS to one of the independent power outputs.	Implemented	P
7.6.3	Mounting		
	Mount the PS according to the PS manufacturer's instructions.	Implemented	P
7.6.4	Procedure		
7.6.4.1	Stimuli		
	Apply an EPS voltage of 230 V AC at the frequency specified by the PS manufacturer and operate the PS.	Implemented	P
	Remove the EPS for at least 61 s.	Implemented	P
	Re-apply the EPS for at least 61 s.	Implemented	P
7.6.4.2	Measurement		
	Monitor the EPS Fault signal or message output of the PS.	Implemented	P
7.6.5	Pass/Fail Criteria		
	Monitor the EPS Fault signal or message output of the PS.	Implemented	P
	The EPS Fault signal or message shall be removed within 61 s after reconnection of the EPS.	Comply EPS fault signal appeared and removed in 2 s	P

EN 50131-6			
Clause	Requirement – Test	Result - Remark	Verdict

7.7	**Signalling: Storage Device – Low Voltage**		
7.7.1	Principle		
	The principle of this test consists of simulating a dropping SD voltage and verifying that an APS Fault signal or message is generated at the SD voltage specified by the PS manufacturer.	(See appended tables 7.7a and 7.7b)	P
7.7.2	Test Conditions		
	Connect a load demanding at least 10 % of the rated output of the PS to one of the independent power outputs.	Implemented	P
	Simulate the presence of the SD by connecting a variable voltage power supply, or as advised by the PS manufacturer.	Implemented	P
7.7.3	Mounting		
	Mount the PS according to the PS manufacturer's instructions.	Implemented	P
7.7.4	Procedure – Phase 1		
7.7.4.1	Stimuli		
	For PS types A and B, apply an EPS voltage of 230 VAC at the frequency specified by the PS manufacturer.	230 Vac, 50Hz	P
	For all types of PS, verify that the initial simulated SD voltage represents a fully charged SD.	Implemented	P
	Operate the PS.	Implemented	P
	For type A PS only, remove the EPS.	Implemented	P
	Slowly reduce the simulated SD voltage until an APS Fault or SD Low Voltage signal or message is generated.	Implemented	P
	Slowly increase the simulated SD voltage until the APS Fault or SD Low Voltage signal or message is removed.	Implemented	P

EN 50131-6			
Clause	Requirement – Test	Result - Remark	Verdict
7.7.4.2	Measurement		
	Measure the simulated SD voltage at which the APS Fault or SD Low Voltage signal or message is generated and removed.	11.3 V “Trouble Battery failure”	P
	Measure the time between the simulated SD voltage reaching and being increased from the SD Failure - Low Voltage value as specified by the PS manufacturer and the generation and removal of the APS Fault or SD Low Voltage signal or message.	Implemented	P
7.7.5	Procedure – Phase II		
	For type A PS only.		
7.7.5.1	Stimuli		
	With the EPS removed, slowly reduce the simulated SD voltage until an APS Fault signal or message is generated.	Implemented	P
	Re-apply the EPS.	Implemented	P
7.7.5.2	Measurement		
	Measure the simulated SD voltage at which the APS Fault signal or message is generated and removed.	Implemented	P
	Measure the time between the re-connection of the EPS and the removal of the APS Fault signal or message.	Implemented	P
7.7.6	Pass/Fail criteria		
	An APS Fault or SD Low Voltage signal or message shall be generated and removed according to Table 2 within the maximum time periods defined in Table 3, when the voltage of the SD falls below the low value as specified by the PS manufacturer.	Comply	P
	For PS type A, the APS Fault signal or message shall be removed within the maximum time periods defined in Table 3, when the EPS is reconnected.	Comply	P

EN 50131-6			
Clause	Requirement – Test	Result - Remark	Verdict
7.8	**Signalling: Storage Device – Failure**		
7.8.1	Principle		
	The principle of this test consists of simulating a failed SD and verifying that an APS Fault signal or message is generated and removed within 24 h of the creation and removal of the SD failure condition.	(See appended table 7.8)	P
7.8.2	Test Conditions		
	Connect a load demanding at least 10 % of the rated output of the PS to one of the independent power outputs.	Implemented	P
	In conjunction with the PS manufacturer, connect a means of simulating a failed SD.	External DC power supply	P
7.8.3	Mounting		
	Mount the PS according to the PS manufacturer's instructions.	Implemented	P
7.8.4	Procedure – Phase 1		
7.8.4.1	Stimuli		
	Apply an EPS voltage of 230 V AC at the frequency specified by the PS manufacturer and operate the PS.	230VAC, 50Hz	P
	Simulate a failed SD and wait until an APS Fault signal or message has been generated or a period of 24 h has passed.	Implemented	P
	Reset the failed SD simulator to a normal healthy SD and wait until an APS Fault signal or message has been removed or a period of 24 h has passed.	Implemented	P
7.8.4.2	Measurement		
	Monitor the time at which the APS Fault signal or message is generated and removed.	Implemented (See appended table 7.8)	P
7.8.5	Procedure – Phase II		
	If the PS has the capability of operating with two or more storage devices in parallel, then the procedure of 7.8.4 shall be repeated for each SD.	Single storage device only	N/A
7.8.6	Pass/Fail Criteria		
	An APS Fault signal or message shall be generated within 24 h of the creation of, and reset within 24 h of the removal of, a failed SD condition.	"Battery Failure"	P

EN 50131-6			
Clause	Requirement – Test	Result - Remark	Verdict

7.9	**Signaling: Low Output Voltage**		
7.9.1	Principle		
	The principle of this test consists of creating an artificial low voltage on any one of the independent power outputs and verifying that a Power Output Fault signal or message is generated within 10 s.	Aux. Output Voltage depends on battery voltage	--
7.9.2	Test Conditions		
	Connect a load demanding at least 10 % of the rated output of the PS to one of the independent power outputs.		N/A
7.9.3	Mounting		
	Mount the PS according to the PS manufacturer's instructions.		N/A
7.9.4	Procedure		
7.9.4.1	Stimuli		
	For PS types A and B, apply an EPS voltage of 230 V AC at the frequency specified by the PS manufacturer.		N/A
	Operate the PS.		N/A
	In conjunction with the PS manufacturer, artificially create a voltage on one of the independent power outputs lower than the minimum power output voltage.		N/A
	If the means to artificially create the low output voltage can be reversed, wait for at least 10 s after the power output fault signal or message has been generated, then restore the independent power output voltage to its rated value.		N/A
7.9.4.2	Measurement		
	Monitor the time at which the Power Output Fault signal or message is generated and removed.		N/A
7.9.5	Pass/Fail Criteria		
	A Power Output Fault signal or message shall be generated and removed within 10 s of the creation and removal of the low output voltage condition.		N/A

EN 50131-6			
Clause	Requirement – Test	Result - Remark	Verdict

7.10	**Signalling: Power Unit Failure**		
7.10.1	Principle		
	The principle of this test consists of creating an artificial failure in the PU and verifying that a Power Output Fault signal or message is generated within 10 s.	(See appended table 7.10)	P
7.10.2	Test Conditions		
	Connect a load demanding at least 10 % of the rated output of the PS to one of the independent power outputs.	16 ohm and K641 keypad	P
7.10.3	Mounting		
	Mount the PS according to the PS manufacturer's instructions.	Implemented	P
7.10.4	Procedure		
7.10.4.1	Stimuli		
	For PS types A and B, apply an EPS voltage of 230 V AC at the frequency specified by the PS manufacturer.	230VAC, 50Hz	P
	Operate the PS.	Implemented	P
	In conjunction with the PS manufacturer, artificially create a failure such that the PU can no longer provide the rated power output voltage at the PS independent power outputs, or charge the SD.	Implemented	P
7.10.4.2	Measurement		
	Monitor the time at which the Power Output Fault signal or message is generated.	Implemented	P
7.10.5	Pass/Fail Criteria		
	A Power Output Fault signal or message shall be generated within 10 s of the creation of the PU failure condition.	Comply	P

EN 50131-6			
Clause	Requirement – Test	Result - Remark	Verdict

7.11	**Signalling: Power Unit Failure – SD Charging**		
7.11.1	Principle		
	The principle of this test consists of simulating a failure in the PU SD charging circuit and verifying that a Power Output Fault signal or message is generated within 10 s.	The SD supply and charging operate on the same lines Both are disabled simultaneously See 7.8.	N/A
7.11.2	Test Conditions		
	Connect a load demanding at least 10 % of the rated output of the PS to one of the independent power outputs.		N/A
	Connect an SD of the maximum capacity specified for the PS. The SD shall be discharged to the minimum level in accordance with 7.1.5.		N/A
7.11.3	Mounting		
	Mount the PS according to the PS manufacturer's instructions.		N/A
7.11.4	Procedure		
7.11.4.1	Stimuli		
	Apply an EPS voltage of 230 V AC at the frequency specified by the PS manufacturer and operate the PS.		N/A
	In conjunction with the PS manufacturer, disable the SD charging circuit.		N/A
	If the means to disable the SD charging circuit can be reversed, wait for 20 s and restore the SD charging circuit to its normal operation.		N/A
7.11.4.2	Measurement		
	Monitor the time at which the Power Output Fault signal or message is generated and removed.		N/A
7.11.5	Pass/Fail Criteria		
	A Power Output Fault signal or message shall be generated within 10 s of the SD charging circuit being disabled, and reset within 10 s of the charging circuit being restored to normal operation.		N/A

EN 50131-6			
Clause	Requirement – Test	Result - Remark	Verdict

7.12	**Remote test**		
7.3.1	Principle		
	The principle of this test consists of triggering the internal tests of SD Failure in accordance with the PS manufacturer's instructions and verifying that the resulting test sequence does not prevent the PS from operating normally.	This test is not mandatory for Grade 3	N/A
7.12.2	Test Conditions		
	Connect a load demanding at least 10 % of the rated output of the PS to one of the independent power outputs.		N/A
	In conjunction with the PS manufacturer, connect a means of simulating a failed SD.		N/A
7.12.3	Mounting		
	Mount the PS according to the PS manufacturer's instructions.		N/A
7.12.4	Procedure – Phase 1		
7.12.4.1	Stimuli		
	Apply an EPS voltage of 230 V AC at the frequency specified by the PS manufacturer and operate the PS.		N/A
	Simulate a failed SD. Trigger the internal test of SD Failure by applying a Remote Test request signal or message according to the PS manufacturer's instructions.		N/A
	Reset the failed SD simulator to a normal healthy SD. Re-trigger the internal test of SD Failure by applying a Remote Test request signal or message according to the PS manufacturer's instructions.		N/A
7.12.4.2	Measurement		
	Measure the voltage at each independent power output.	(See appended table 7.12)	N/A
	Measure the time at which the APS Fault signal or message is generated and removed.		N/A
	Monitor the Tamper output.		N/A

EN 50131-6			
Clause	Requirement – Test	Result - Remark	Verdict
7.12.5	Procedure – Phase 2		
	If the PS has the capability of operating with two or more storage devices in parallel, then the procedure of 7.12.4 shall be repeated for one of the other SDs.	This test is not mandatory for Grade 3	N/A
7.12.6	Pass/Fail Criteria		
	Throughout the test, the voltage at each independent power output shall remain within the limits specified by the manufacturer.		N/A
	An APS Fault signal or message shall be generated within 10 s of application of the Remote Test request signal or message.		N/A
	The APS Fault signal or message shall be removed within 60 s of application of the Remote Test trigger signal or message unless the SD has failed the internal test.		N/A
	No Tamper signal or message shall be generated during the triggering, application or signalling of results of the internal tests of SD Failure.		N/A
7.13	**SD Recharging**		
7.13.1	Principle		
	The principle of this test consists of measuring the current supplied by the PU into a discharged SD over the grade dependant recharge period and verifying that during this period sufficient charge has been supplied to recharge the SD to 80 % of its rated capacity. This test is conducted with the PS under full rated load.	(See appended table 7.13)	P
	For a Grade 4 PS, the SD float charging voltage for a fully charged SD is verified to remain within the SD manufacturer's specified limits when the PS is cycled through its range of operating temperatures.	EUT is a Grade 3 product	N/A
7.13.2	Test Conditions		
	Connect a load to the PS that will demand the full rated output of the PS proportionately spread across all the independent power outputs according to the individual maximum rating of each independent power output.	Implemented	P
	Connect a SD of the maximum capacity specified for the PS. This SD shall be discharged to the minimum level in accordance with 7.1.5 or the level at which the Deep Discharge Protection function of the PS has disconnected the SD during the APS operating period.	Implemented	P
7.13.3	Mounting		

EN 50131-6			
Clause	Requirement – Test	Result - Remark	Verdict
	Mount the PS according to the PS manufacturer's instructions.	Implemented	P
	A Grade 4 PS shall be mounted in a suitable test enclosure in which the temperature can be varied between the minimum and maximum temperatures for the Environmental Class for which the PS is specified.	EUT is a Grade 3 product	N/A
7.13.4	Procedure		
7.13.4.1	Stimuli		
	Apply an EPS voltage of 230 V AC at the frequency specified by the PS manufacturer and operate the PS.	Implemented	P
	For a Grade 4 PS extend the maximum SD recharge period by 100 %, or as otherwise agreed with the PS manufacturer, to achieve full charge of the SD. Continue to operate the PS such that the SD is float charging. Cycle the temperature of the test enclosure twice between the maximum and minimum operating temperatures for the rated Environmental Class of the PS over a period of 24 h. Each cycle shall commence and end with the maximum temperature.	EUT is a Grade 3 product	N/A
7.13.4.2	Measurement		
	Before connection of the EPS, measure the open circuit terminal voltage of the SD.	Implemented	P
	Measure the current supplied to the SD over the grade dependent maximum SD recharge period as defined in EN 50131-1.	Implemented	P
	For a Grade 4 PS, measure the ambient temperature of the SD and the charging current and voltage applied to the SD during the temperature cycled float charging period.	EUT is a Grade 3 product	N/A
7.13.5	Pass/Fail Criteria		
	The open circuit terminal voltage of the SD shall be above any minimum SD voltage specified by the PS manufacturer at which an SD shall be charged. Recharging of the SD shall automatically commence when the EPS is connected.	Comply	P
	Sufficient current shall have been supplied to the SD to restore 80 % of the rated capacity of the SD during the maximum recharge period.	Comply	P
	For a Grade 4 PS, the float charge current and voltage shall remain within the limits defined by the SD manufacturer over the test temperature range.	EUT is a Grade 3 product	N/A

EN 50131-6			
Clause	Requirement – Test	Result - Remark	Verdict
7.14	**Over-voltage Protection**		
7.14.1	Principle		
	The principle of this test consists of simulating, or otherwise creating, a component failure in the PS to activate the over-voltage protection and verifying that the power output voltage at all independent power outputs is limited to 125 % of the maximum power output voltage.	Over voltage protection set at 15.5 Volts, which does not exceed 125% of the maximum power output voltage. No multiple independent power outputs	--
7.14.2	Test Conditions		
	Connect a load demanding at least 10 % of the rated output of the PS to one of the independent power outputs.		N/A
7.14.3	Mounting		
	Mount the PS according to the PS manufacturer's instructions.		N/A
7.14.4	Procedure		
7.14.4.1	Stimuli		
	For PS types A and B, apply an EPS voltage of 230 V AC at the frequency specified by the PS manufacturer.		N/A
	Operate the PS.		
	In conjunction with the PS manufacturer, simulate or otherwise create a component failure in the PS capable of generating a voltage greater than 125 % of the maximum power output voltage on one or more independent power outputs.		N/A
7.14.4.2	Measurement		
	Measure the voltage on all independent power outputs.		N/A
7.14.5	Pass/Fail Criteria		
	The voltage on any independent power output shall not exceed 125 % of the maximum power output voltage of the PS.		N/A

EN 50131-6			
Clause	Requirement – Test	Result - Remark	Verdict

7.15	**Short Circuit Protection**		
7.15.1	Principle		
	The principle of this test consists of applying a short circuit load to one or more independent power outputs of the PS and verifying that there is no influence on any other independent power output.	No multiple independent power outputs	N/A
	On removal of the short-circuit and reset of any protection device, the voltage and output current capability of all independent power outputs are verified that they operate within the PS manufacturer's specified limits.		--
7.15.2	Test Conditions		
	Connect a load to one of the independent power outputs, capable of switching a demand between at least 10 % of the rating of that independent power output and a short circuit within 10 ms.		N/A
7.15.3	Mounting		
	Mount the PS according to the PS manufacturer's instructions.		N/A
7.15.4	Procedure – Phase 1		
7.15.4.1	Stimuli		
	For PS types A and B, apply an EPS voltage of 230 V AC at the frequency specified by the PS manufacturer.		N/A
	Operate the PS.		N/A
	Switch the load demand from at least 10 % to a short circuit.		N/A
7.15.4.2	Measurement		
	Measure the voltage and ripple voltage during the test at each unloaded independent power output.		N/A
	Monitor the voltage at each unloaded independent power output for transients.		N/A
7.15.5	Procedure - Phase 2		
7.15.5.1	Stimuli		
	Remove the short circuit and reset any protection device, if applicable.		N/A
	Connect a load to the test output that will demand 100 % of the rating of that output.		N/A
	Operate the PS.		N/A

EN 50131-6			
Clause	Requirement – Test	Result - Remark	Verdict

7.15.5.2	Measurement		
	Measure the voltage and ripple voltage during the test at each independent power output.		N/A
7.15.6	Repeat		
	For PS having two or more independent power outputs, repeat this test with the switched load connected to each of the other independent power outputs in turn.		N/A
	Pass/Fail Criteria		--
	Throughout the test, the voltage and ripple voltage at each independent power output except the short-circuit output shall remain within the limits specified by the manufacturer.	Comply	N/A
	Any transient voltages detected at the unloaded independent power output shall meet the requirements of 4.15.7.	Comply	N/A

EN 50131-6			
Clause	Requirement – Test	Result - Remark	Verdict

7.16	**Overload Protection**		
7.16.1	Principle		
	The principle of this test consists of:		--
	a) applying an overload to one or more independent power outputs of the PS and verifying that there is no influence on any other independent power output	No multiple independent power outputs	N/A
	b) on removal of the overload condition and reset of any protection device, the voltage and current capability of all independent power outputs are restored to the PS manufacturer's specified limits.		N/A
7.16.2	Test Conditions		
	Connect a variable load to one of the independent PS outputs, capable of continuous adjustment from 10 % to 150 % demand of the rating of that independent power output.		N/A
7.16.3	Mounting		
	Mount the PS according to the PS manufacturer's instructions.		N/A
7.16.4	Procedure – Phase 1		
7.16.4.1	Stimuli		
	For PS types A and B, apply an EPS voltage of 230 V AC at the frequency specified by the PS manufacturer.		N/A
	Operate the PS.		N/A
	Vary the load demand from 10 % to 150 % over a period of 10 s.		N/A
7.16.4.2	Measurement		
	Measure the voltage and ripple voltage during the test at each unloaded independent power output.		N/A
	Monitor the voltage at each unloaded independent power output for transients.		N/A

EN 50131-6			
Clause	Requirement – Test	Result - Remark	Verdict
7.16.5	Procedure - Phase 2		
7.16.5.1	Stimuli		
	Remove the overload condition and reset any protection device, if applicable.		N/A
	Connect a load to the test output that will demand 100 % of the rating of that output.		N/A
	Operate the PS.		N/A
7.16.5.2	Measurement		
	Measure the voltage and ripple voltage during the test at each independent power output.		P
7.16.6	Repeat		
	For PS having two or more independent power outputs, repeat this test with the variable load connected to each of the other independent power outputs in turn.		N/A
7.16.5	Pass/Fail Criteria		
	Throughout the test, the voltage and ripple voltage at each unloaded independent power output except the overloaded output shall remain within the limits specified by the manufacturer.		N/A
	Any transient voltages detected at the unloaded independent power output shall meet the requirements of 4.15.7.		N/A

EN 50131-6			
Clause	Requirement – Test	Result - Remark	Verdict

7.17	**Deep Discharge Protection**		
7.17.1	Principle		
	The principle of this test consists of simulating a dropping SD voltage during the APS operating period and verifying that the SD is disconnected at the Deep Discharge Protection voltage specified by the PS manufacturer.	(See appended table 7.17)	--
7.17.2	Test Conditions		
	Connect a load demand of at least 10 % of the rated output of the PS to one of the independent power outputs.	Implemented	P
	Simulate the presence of the SD by connecting a variable voltage power supply, or as advised by the PS manufacturer.	External DC power supply used	P
7.17.3	Mounting		
	Mount the PS according to the PS manufacturer's instructions.	Implemented	P
7.17.4	Procedure		
7.17.4.1	Stimuli		
	For PS types A and B, apply an EPS voltage of 230 V AC at the frequency specified by the PS manufacturer.	230VAC, 50HZ	P
	Verify that the initial simulated SD voltage represents a fully charged SD.	Implemented	P
	Operate the PS to verify correct power output voltage.	Implemented	P
	For types A and B PS, remove the EPS.	Implemented	P
	Slowly reduce the simulated SD voltage.	Implemented	P
7.17.4.2	Measurement		
	Measure the simulated SD voltage at which the SD is disconnected from the load.	Implemented	P
	Measure the voltage at each independent power output.	Implemented	P
7.17.5	Pass/Fail Criteria		
	The SD shall be disconnected from the load when the voltage of the SD falls below the Deep Discharge Protection value as specified by the PS manufacturer.	Comply	P
	The voltage at each independent power output shall have reduced below the minimum power output voltage before the SD is disconnected.	Comply	P

EN 50131-6			
Clause	Requirement – Test	Result - Remark	Verdict

7.18	**Automatic Changeover to APS**		
7.18.1	Principle		
	The principle of this test consists of verifying that no excessive transient voltages are generated during the changeover period between EPS and APS operation.	(See appended table 7.18)	P
7.18.2	Test Conditions		
	Connect a load to the PS that will demand the full rated output of the PS proportionately spread across all the independent power outputs according to the individual maximum rating of each independent power output.	Implemented	P
	Connect an SD of maximum rated capacity that is charged to greater than 80 % of its rated capacity.	Fully charged battery	P
7.18.3	Mounting		
	Mount the PS according to the PS manufacturer's instructions.	Implemented	P
7.18.4	Procedure		
7.18.4.1	Stimuli		
	Apply an EPS voltage of 230 V AC at the frequency specified by the PS manufacturer.	230VAC, 50Hz	P
	Operate the PS.	Implemented	P
	Disconnect the EPS.	Implemented	P
7.18.4.2	Measurement		
	Measure the voltage during the test at each independent power output.	Implemented	P
7.18.5	Pass/Fail Criteria		
	The voltage throughout the test at each independent power output shall remain within the limits specified by the PS manufacturer.	Comply	P
	Any transient voltages detected at the independent power outputs shall meet the requirements of 4.15.7.	Comply	P

EN 50131-6			
Clause	Requirement – Test	Result - Remark	Verdict

7.19	**Tamper Protection**		
7.19.1	Principle		
	The principle of this test is to use Impact testing to verify that the PS housing meets the tamper protection requirements of 4.11.1.	(See appended table 7.19)	--
7.19.2	Procedure		
7.19.2.1	Stimuli		
	Subject the PS housing to impact tests in accordance with EN 50130-5.	This test is covered by a separate, environmental test report (EN 50131-3)	P
7.19.2.2	Measurement		
	Assess the PS as described in the reduced functional test in 7.2.	See above	P
7.19.3	Pass/Fail Criteria		
	The PS shall meet the requirements of the reduced functional test before, during and after the environmental tests.	See above	P
	The generation of signals or messages is permitted as a result of this test.	See above	P
	There shall be no signs of mechanical damage that will reduce the integrity of the PS housing unless a tamper signal or message has been generated.	See above	P

7.20	**Tamper Detection – Access to the inside of the housing**		
7.20.1	Principle		
	The principle of this test is to verify that it is not possible to insert a tool into the PS in its normal mounting position and defeat the operation of the tamper detection circuitry or otherwise adversely affect the operation without generating a tamper signal or message or causing visible damage.	This test is covered by a separate, environmental test report (EN 50131-3)	P
7.20.2	Test Conditions		
	Connect a load demanding at least 10 % of the rated output of the PS to one of the independent power outputs.	Implemented	P
7.20.3	Mounting		
	Mount the PS according to the manufacturer's instructions with the housing secured closed.	Implemented	P
7.20.4	Procedure		

EN 50131-6			
Clause	Requirement – Test	Result - Remark	Verdict
7.20.4.1	Stimuli		
	For PS types A and B, apply an EPS voltage of 230 V AC at the frequency specified by the PS manufacturer.	Implemented	P
	Operate the PS.	Implemented	P
	Without causing significant visible damage, attempt to gain access to all components, means of adjustment and mounting screws which, when interfered with, could adversely affect the operation of the PS.	Implemented	P
7.20.4.2	Measurement		
	Measure the voltage of the PS at each independent power output.	Implemented	P
	Monitor the EPS, APS, Power Output Fault and Tamper signal or message outputs of the PS.	Implemented	P
7.20.5	Pass/Fail Criteria		
	Normal access shall require the use of an appropriate tool. For the grades specified in Table 4, it shall not be possible to gain access to any components, means of adjustment and mounting screws, which, when interfered with, could adversely affect the operation of the PS, without generating a tamper signal or message or causing visible damage.	Comply	P
	The voltage throughout the test at each independent power output shall remain within the limits specified by the manufacturer.	Comply	P

7.21	**Tamper Detection – Removal from mounting**		
7.21.1	Principle		
	The principle of this test consists of removing the PS from its mounting surface and monitoring the PS to determine whether a Tamper signal or message is generated within the required time period when the maximum permitted distance has been exceeded.	This test is covered by a separate, environmental test report (EN 50131-3)	P
7.21.2	Test Conditions		
	Connect a load demanding at least 10 % of the rated output of the PS to one of the independent power outputs.	Implemented	P
7.21.3	Mounting		
	Position the PS sample on a horizontal flat surface, taking into account any requirements specified by the manufacturer to operate the removal from mounting detection device.	Implemented	P
7.21.4	Procedure		

7.21.4.1	Stimuli		
	For PS types A and B, apply an EPS voltage of 230 V AC at the frequency specified by the PS manufacturer.	Implemented	P
	Operate the PS.	Implemented	P
	Lift the PS from the flat surface in a perpendicular direction to the mounting surface by the distance specified in 4.11.2.2, whilst monitoring the Tamper signal or message output.	Implemented	P
	Attempt to slide a test blade as defined in 4.11.2.2 to defeat the removal from mounting detection before and during the above test.	Implemented	P
7.21.4.2	Measurement		
	Monitor the Tamper signal or message output.	Implemented	P
	Record whether it was possible to prevent the generation of a Tamper signal or message using the test blade.	It was NOT possible to prevent the generation of a tamper signal	P
7.21.5	Pass/Fail Criteria		
	The Tamper signal or message shall have been generated within 11 s of the PS exceeding the distance specified in 4.11.2.2.	Comply	P
	It shall not have been possible to prevent the generation of a Tamper signal or message using the test blade.	Comply	P

7.22	**Tamper Detection – Penetration of the housing**		
7.22.1	Principle		
	The principle of this test consists of drilling a hole in an accessible face of the PS housing and verifying that a Tamper signal or message is generated.	This test is not mandatory for Grade 3	--
7.22.2	Test Conditions		
	Connect a load demanding at least 10 % of the rated output of the PS to one of the independent power outputs.		N/A
7.22.3	Mounting		
	Mount the PS according to the PS manufacturer's instructions.		N/A

7.22.4	Procedure		
7.22.4.1	Stimuli		
	For PS types A and B, apply an EPS voltage of 230 V AC at the frequency specified by the PS manufacturer.		N/A
	Operate the PS.		N/A
	Drill a hole of 4 mm diameter in any accessible face of the PS using a metal drill bit.		N/A
7.22.4.2	Measurement		
	Monitor the Tamper signal or message output.		N/A
7.22.5	Pass/Fail Criteria		
	For the grades specified in Table 4, a Tamper signal or message shall be generated when a hole of 4 mm is made in any accessible face of the PS housing.		N/A

7.23	**Environmental and EMC**		
7.23.1	Principle		
	The principle of this test is to verify using the Reduced Functional Test of 7.2 that the PS will operate correctly during or after given environmental conditioning without significant mechanical damage or degradation of performance.	See appended table 7.23 Environmental and EMC issues covered by separate test reports	P
7.23.2	Procedure		
7.23.2.1	Stimuli		
	Subject the PS to the tests given in Table 6, in accordance with EN 50130-5, EN 50130-4 and EN 61000-6-3 applying the reduced functional test of 7.2, before, during and after each conditioning, inclusive of any recovery period specified in EN 50130-5. The tests shall be applied to the sample number of the product under test in accordance with Table 6.		P
	For type A PS the SD is permitted to charge during the operational tests and remains at its final state of charge for the reduced functional test applied after the environmental conditioning.		P
7.23.2.2	Measurement		
	Assess the PS as described in the reduced functional test of 7.2.		P
7.23.3	Pass/Fail Criteria		
	The PS shall meet the requirements of the reduced functional test before, during and after the environmental tests in accordance with Table 6.		P
	There shall be no signs of mechanical damage that will reduce the integrity of the PS housing.		P
	The shock and impact tests may generate transient signals or messages, but these shall not be present for longer than 200 ms.		P
	For EMC tests, the PS shall operate within the limits defined in EN 50130-4 and EN 61000-6-3.		P

7.24	**Marking and Documentation**		P
7.24.1	Principle		
	The principle of this test consists of verifying that the marking of the PS and the documentation supplied with the PS meets the requirements of Clauses 5 and 6.	(See appended table 7.24)	--
7.24.2	Procedure		
	Examine the marking of the PS.	Implemented	P
	Examine the documentation supplied by the PS manufacturer.	Implemented	P
7.24.3	Pass/Fail criteria		
	The marking on the PS shall meet the requirements of Clause 5 of this standard.	Comply	P
	The documentation shall meet the requirements of Clause 6 of this standard.	Comply	P

12 Tables of Test Results

7.2	TABLE: Reduced functional test								P
EUT type	Mains voltage, VAC	Load (A)	Independent PS output - Nominal values	Measured output voltage, VDC	Output voltage limit, VDC		Ripple, mVp.t.p		Verdict
					Min	Max	Measured	Limit	
PS output - Maximum load									
Output									
	230	0.7A	12V	14.3	12.6	14.3	0.158	0.7	P
Monitor EPS, APS, PS fault and Tamper									
No EPS, APS, PS fault or Tamper fault message active									P
Open PS housing by normal means									
Tamper signal activated immediately following the removal of the metal cover									P

Reference numbers of test equipment used

HL479	HL1852	HL 4166	HL 1988

7.3	Table: PS Rating								P
EUT type	Mains voltage, VAC	Load (A)	Independent PS output - Nominal values	Measured output voltage, VDC	Output voltage limit, VDC		Ripple, mVp.t.p		Verdict
					Min	Max	Measured	Limit	
PS output - Maximum load									
A	195	0.7A	12V	14.3	12.6	14.3	0.158	0.7	P
A	253	0.7A	12V	14.3	12.6	14.3	0.158	0.7	P
PS output – No load									
A	195	0	12V	14.3	12.6	14.3	0.124	0.7	P
A	253	0	12V	14.3	12.6	14.3	0.124	0.7	P
Quiescent current consumption measured at the end of the test after the disconnection of EPS and load									
SD Quiescent current consumption, mA									Verdict
Measured					Limit stated by manufacturer				
180 mA					110mA (keypad) +100 mA (Panel)				P

Reference numbers of test equipment used

HL479	HL1852	HL 4166	HL 1988

7.4	TABLE: Gradual load variation							N/A
PS Type	Grade	Test Voltage (V)	SD condition	Load condition (A)	Output Rated (V)	Output Measured (V)	Output ripple mVp.t.p	Result / Comments
Output measured								
Supplementary information:								
HL equipment used:								

7.5	TABLE: Switched Load Variation							N/A
PS Type	Grade	Test Voltage (V)	SD condition	Load condition (A)	Output Rated (V)	Output Measured (V)	Output ripple mVp.t.p	Result / Comments
Output A measured								
Supplementary information:								
HL equipment used:								

7.7a	TABLE: Signaling: Storage Device – Low Voltage			P
Component	Low voltage limit stated	Measured low voltage limit	Response	Result / Comments
DAHUA DHB 12-7	11.3V	11.3 V	Battery Trouble	P
Supplementary information: Battery test is performed in intervals of 1 min				

7.7b	TABLE: Signalling: Storage Device – Low Voltage					P
Component	Security Grade	Low voltage		Restored voltage		Result / Comments
		Maximum time for indication*	Measured time for indication*	Maximum time for indication*	Measured time for indication*	
Phase II – EPS connected						
DAHUA DHB 12-7	3	5 min	1 min	1 min	1 min	P
Phase II – No EPS						
DAHUA DHB 12-7	3	5 min	1 minutes	1 min	1 min	P
*Supplementary information: Battery test is performed in intervals of 1 min						

Reference numbers of test equipment used

HL2178

7.8	TABLE: Signalling: Storage Device – Failure			P
PS	Action	Response	Time for response	Result/ Comments
	Apply SD Failure	Green LED Off “System/Panel; Battery Failure” Event Log: “Trouble, Battery Failure”	8 sec	P
	Remove SD Failure	Green LED On “Troubles” message disappears. Event Log: “Trouble restored, Battery restored”	22 sec	P
Supplementary information: Disconnected the battery. (System runs a Battery test every minute. Message will not appear or clear until this check is made by the system, hence the 2 different times)				

7.9	**TABLE: Low output voltage**							**N/A**
Tested by:							**Date:**	
PS Type	Grade	Test Voltage (V)	SD condition	Load condition (A)	Time to generate low output signal	Time to remove low output signal	Result / Comments	
Output A								
A								
Supplementary information: Voltage on the Aux. Output is tied to the Battery line. Cannot get a low voltage on the output without disconnecting the EPS								
HL equipment used								

7.10	TABLE: Signalling: Power Unit Failure (230 Vac, 50 Hz)			P
PS	Action	Response	Time for response	Result / Comments
	Artificially create a failure such that the PU can no longer provide the rated power output voltage	Orange and Green Led Off “Troubles” message: “System/Panel; AC Failure”	1.5 s	P
Supplementary information:				

7.11	TABLE: Power Unit Failure – SD Charging							N/A
Tested by:							**Date:**	
PS Type	Grade	Test Voltage (V)	SD condition	Load condition (A)	Time to generate Power Output Fault signal	Time to remove Power Output Fault signal	Result / Comments	
Battery								
A								
Supplementary information: The SD supplying and charging operate on the same lines. If one direction (charging or supplying) is disabled, both are disabled								

HL equipment used				

7.13	TABLE: SD Charging			P
Battery capacity	SD Voltage	Average current supplied to SD	Time for recharge battery from fully discharged	Result / Comments
7 AH	10.8 Vdc (before connection of EPS	850 mA	8 hours	P
Supplementary information: Battery discharged to the level of Deep Discharge protection specified by the manufacturer (8.5Vdc). Panel set up to charge at 850mA				

7.17	TABLE: Deep discharge protection						P
Tested by: Mihaeli Feldmann						**Date:**	
PS Type	Grade	Test Voltage (V)	SD condition	Load condition (A)	Deep discharge allowed (V)	Deep discharge break (V)	Result / Comments
A	3	230	-	10%	10.5 +/-3V	10.7V	P
Supplementary information: Used and external DC power supply to simulate an SD. Manufacture rating of Deep-Discharge Protection is 10.5 +/-3V							

7.18	TABLE: Automatic Changeover to APS				P
PS model Number	Action	Measured voltage at PS output	Transient voltage measured on PS output	Transient limits*	Result / Comments
EVO HD Aux Out put	Remove ESD	12.8	No transients	11.4 V min 15.0 V max	P
Supplementary information: *Transient limits are 125% of the maximum voltage and 90% of the minimum voltage not exceeding 200ms, and 140% of the maximum voltage and 75% of the minimum voltage, not exceeding 1 ms. (limits based on 12VDC rating). Tested with system 3.					

7.19	TABLE: Tamper protection						P
Tested by: (*)						**Date:** (*)	
PS Type	Grade	Test Voltage (V)	SD condition	Severity level	Impact energy (J)	Result / Comments	
A	3					*This test is covered by a separate test report (EN 50131-3)	
Supplementary information:							

HL equipment used:				
HL 3013				

7.20	TABLE: Tamper Protection – Access to the inside of the housing					P
PS Type	Grade	Test Voltage (V)	SD condition		Result / Comments	
A	3	230	Charged		Normal access requires the use of a screwdriver. It is not possible to gain access to any components, means of adjustment and mounting screws, which, when interfered with, could adversely affect the operation of the PS, without generating a tamper signal or message or causing visible damage. The voltage throughout the test at each independent power output remains within the limits specified by the manufacturer.	
Supplementary information:						
HL equipment used:		HL 1814		HL 2043		

7.21	TABLE: Tamper detection – Removal from mounting								P
PS Type	Grade	Test Voltage (V)	SD condition	Operation distance allowed (mm)	Operation distance measured (mm)	Time required for Tamper signal generation	Time measured for Tamper signal generation	Result / Comments	
A	3	230	Charged	5	3	11 sec	T<1 sec	P	
Supplementary information: - Operational distance is crucially dependent on the tension of the Tamper spring - It was not possible to prevent the generation of a Tamper signal or message using the test blade of 4.11.2.2.									
HL equipment used:			HL 1814						

7.22	TABLE: Tamper detection – Penetration of the housing					N/A
PS Type	Grade	Test Voltage (V)	SD condition	Straight flute drill (mm)	Result / Comments	
					This test is not mandatory for Grade 3	
Supplementary information:						

7.23	TABLE: Environmental and EMC (class II)			P*
Test Conditions	Reduced functional test results			
	Before	During	After	Result
Dry Heat (Operational)	P	P	P	P
Cold (Operational)	P	P	P	P
Damp Heat, Steady State (Endurance)	P	-	P	P
Damp Heat, Cyclic (Operational)	P	P	P	P
Impact	P	-	P	P
Mechanical Shock (Operational)	P	Monitor	P	P
Vibration, Sinusoidal (Operational)	P	Monitor	P	P
Vibration, Sinusoidal (Endurance))	P	-	P	P
EMC (Susceptibility)	P	Monitor	P	P
EMC (Emissions)	P	EN 61000-6-3	P	P

Supplementary information:
"P" for result of reduced functional test indicated that the results are identical to those in clause 7.2.

"Monitor" indicates no errant signals or messages occurred during the conditioning period.
Conditioned according to EN 50130-5 for Environmental class II

The detailed resuts are enclosed in separate HL Reports

* See EMC and Environmental test reports

7.24	Table: Marking and Documentation		P
50131-1	**Marking**	**Clause**	**Switching PS**
Name of manufacturer or supplier		15	✓
standard to which the component claims compliance		15	✓
Date of manufacture or batch or serial number		15	✓
Security Grade		15	✓
Environmental Class		15	✓
50131-1	**Documentation**		
Name of manufacturer or supplier		14.2	✓
Description of equipment		14.2	✓
Standards to which component claims compliance		14.2	✓
Security grade		14.2	✓
environmental class		14.2	✓
50131-6	**Documentation**		
a) Installation, commissioning, maintenance and operation instruction		6	✓
b) Brief description of operation		6	✓
c) Type of PS		6	✓
d) For type A and B – Voltage ,frequency for EPS		6	✓
e) Rated output of PS and max rated of each independent PS		6	✓
f) Power requirement of each component		6	✓
g) Output voltage range under normal operation		6	✓
h) for PS with DC output, max output p.t.p ripple		6	✓
i) type of SD, max capacity, max time to recharge to 80%		6	✓
j) SD voltage below which the APS fault: Low Voltage signal or message will be generated		6	✓
k) Voltage at any independent power output below which the Power Output fault signal or message generated		6	✓
l) SD voltage below which Deep Discharge Protection operate		6	✓
m) Over Voltage protection trigger voltage		6	✓
n) Connection details to enable effective operation		6	✓
o) Electrical and logical characteristics of monitoring signals and messages, e.g. dry contacts & protocols		6	✓
p) operating temperature and humidity range		6	✓
q) weights and dimensions		6	✓
r) fixing details		6	✓
s) details of user serviceable parts, e.g. fuses		6	✓
t) details of any required calibration checks		6	NA

Notes:
Documentation reference is: Installation Guide Version 1.1 (EVOHD-EI00.pdf)

13 APPENDIX A Test equipment and ancillaries used for tests

HL No	Description	Manufacturer	Model	Ser. No.	Last Cal.	Due Cal.
HL1415	Multimeter	Fluke	73 III	76080133	14-Jul-13	14-Jul-14
HL1082	Power Supply DC,18 V, 2 A	Horizon Electronics	DHR 18 - 2	51824220	19-Feb-14	19-Feb-15
HL1988	Scopemeter	Fluke	199	DM7830108	12-Jan-14	12-Jan-15
HL4166	Data Logger Hydra	Fluke	2620A	7151502	09-Oct-13	09-Oct-14
HL 1842	Power Supply, Dual Regulated, 18V, 2A	Horizon Electronics	DHR 18-2	51824226	19-Feb-14	19-Feb-15
HL 3155	Power Converter, 5 kVA, 1 phase	Adaptive Power Systems, Inc.	APS1005MX230	2260059	22-Apr-14	22-Apr-15
HL 2178	Digital Programmable Power Supply 80V/75A, DC	Xantrex	XDC 80-75	76235	18-Jun-13	18-Jun-14
HL 1814	Caliper, 150 mm	Mitutoyo	150	367	20-Jun-13	20-Jun-15

14 APPENDIX B Test laboratory description

Testing laboratory and location	Tests were performed at Hermon Laboratories, which is a fully independent, private safety, EMC, telecommunication and environmental testing facility. Hermon Laboratories is accredited by American Association for Laboratory Accreditation (A2LA, USA) according to ISO GUIDE 17025 (certificate No. 839.01) and accredited as CBTL under responsibility of SII. The safety laboratory has gained numerous certifications and accreditations from National Certification Bodies including UL, ETL, TUV, MET, SII, Telefication and others, and provides solution for global safety certification in various product categories. Address: P.O. Box 23, Binyamina 30500, Israel. Telephone: +972 4626 8401 Fax: +972 4626 8444 e-mail: mail@hermonlabs.com website: www.hermonlabs.com Person for contact: Mr. Michael Brun, Product Safety Group Manager

15 APPENDIX C Abbreviations and acronyms

A	ampere
AC	alternating current
A/m	ampere per meter
APS	alternative power source
cm	centimeter
DC	direct current
DVM	digital voltmeter
EMC	electromagnetic compatibility
EMI	electromagnetic interference
EN	European Norm
EPS	external power source
EUT	equipment under test
GHz	gigahertz
GND	ground
H	height
HL	Hermon laboratories
Hz	hertz
IAS	intruder alarm system
k	kilo
kHz	kilohertz
kV	kilovolt
L	length
m	meter
MHz	megahertz
min	minute
mm	millimeter
ms	millisecond
µs	microsecond
NP	normal performance
PS	power supply
PU	power unit
s	second
SD	storage device
V	volt
W	width

16 APPENDIX D Specification references

EN 50131-6:2008	Alarm systems – Intrusion and hold-up systems – Part 6: Power supplies
EN 50131-1:2006+A1:2009	Alarm systems – Intrusion and hold-up systems – Part 1: System requirements

,

End of Test Report